Instructions for use

HOME DELUXE
WIR MACHEN DEIN ZUHAUSE

Traditional sauna ARUNA S



Original instructions for use

Designed in Germany

IMPORTANT:
KEEP FOR FUTURE REFERENCE.
READ CAREFULLY!

Table of contents

1. General 3
1.1. Product overview....3
1.2. General information 3
1.3. Warranty....3
2. Information on the instructions for use 4
2.1. Information on translation 4
2.2. Availability of the instructions for use 4
2.3. Target groups for the instructions for use 4
2.4. Explanation of symbols....4
2.5. General information about the instructions for use 5
2.6. Intended use....5
2.7. Safety instructions 5
3. Product features....7
3.1. Technical data....7
3.2. Product description 7
4. Scope of delivery 8
5. Assembling the sauna....12
5.1. Safety instructions 13
5.2. Assembly of the product 13
5.3. Sauna heater: Model JM 20
5.4. Safety instructions 20
5.5. Installation and electrical connection of the sauna heater....21
6. Application....23
6.1. Safety instructions 23
6.2. Initial commissioning....24
6.3. Operation....24
6.4. Controls 25
6.5. Sauna stones and sauna infusion 26
6.6. Sauna recommendations....27

7. Troubleshooting 28
8. Maintenance and care 29
9. Disassembly 29
9.1. Safety instructions 29
10. Disposal instructions 30
11. Electrical and electronic equipment – information for private households 31

Dear customer,

Thank you for choosing a product from **Home Deluxe GmbH**. We hope you enjoy your new "Traditional Sauna ARUNA S".

The operating instructions will help you with the assembly, commissioning, operation and maintenance of the product. The operating instructions and safety instructions must be read carefully and in full. Follow these instructions to avoid hazards.

1. General

1.1. Product overview

Model: Traditional Sauna ARUNA S

Item ID: 29343 | Variant ID: 74605

1.2. General information

In order to meet our standards, we are constantly improving quality, simplifying assembly and operation, and adapting our products to customer requirements. Due to these changes, the current version of the operating instructions can be found on our website.

The term "product" is used in the operating instructions for the "Traditional Sauna ARUNA S", unless specific reference is made to the sauna, sauna cabin or sauna heater.

1.3. Warranty

The statutory liability for defects and warranty rights apply from the date of purchase.
Home Deluxe GmbH accepts no liability for damage caused by failure to follow the instructions for use. Complaints arising from improper installation or use are excluded from the warranty. In the event of defects in the product, please contact our customer service in writing using the contact form on our homepage, stating the product name, serial number and a photo of the type plate:

Home Deluxe GmbH
Schanzeweg 2
32312 Lübbecke
Germany
Tel.: +49 (0)5743 6181-0
www.home-deluxe-gmbh.de

If you have any further questions, please do not hesitate to contact our customer service team using the contact form.

2. Information about the instructions for use

2.1. Information about the translation

The original instructions for use were written in German. All other available languages are translations of the German version.

2.2. Availability of the instructions for use

The instructions for use are part of the product and should be kept complete and in close proximity to the product. Due to changes, the current version of the instructions for use can be found on our homepage.

2.3. Target groups for the instructions for use

The operating instructions must be read and observed by every person involved who is assigned to one of the following activities or uses:

- Unpacking
- Assembly/installation
- Commissioning/operation
- Maintenance/testing/care
- Troubleshooting/repair
- Disposal

2.4. Explanation of symbols

Symbol	Explanation of symbols
	**WARNING** This symbol indicates potential hazards that could result in fatal or serious injury. Before carrying out the relevant installation or application step, the corresponding note must be read.
	**INFO** This symbol indicates important information and points out potential damage to property. Please read this information before carrying out the relevant installation or application step in order to understand any problems and avoid damage.
	**CE marking** This symbol indicates that the product complies with the applicable requirements imposed on us by the European Community. The current declaration of conformity is available on request from Home Deluxe GmbH.
	**Follow the instructions for use** This symbol indicates that the instructions for use must be read carefully before assembling/installing and/or operating the product.
	**Do not cover** This symbol indicates that it is prohibited to place anything on the sauna heater or cover it.
	**Disposal of electrical and electronic equipment** Electrical and electronic equipment must not be disposed of with household waste!

Symbol	Explanation of symbols
	**Protection class I** The symbol indicates that all conductive parts of the equipment must be connected to the protective conductor system of the fixed electrical installation. This is a protective earth connection. In the event of a fault current, a fuse disconnects the circuit from the power supply.
	**Alternating current** This symbol indicates that the product is powered by alternating current.

2.5. General information about the operating instructions

The operating instructions refer to the ARUNA S traditional sauna. They contain important information on installation, operation, maintenance and cleaning. The operating instructions, in particular the safety instructions, must be read carefully before using the product. Keep the operating instructions in a safe place. Only use the product as described in these operating instructions to avoid accidental injury or damage. If the product is passed on to a third party, these operating instructions must also be handed over.

2.6. Intended use

The sauna is high-quality, durable and intended and suitable exclusively for private use within reasonable and normal limits. Furthermore, our product is not intended for commercial use.

The sauna is intended exclusively for indoor use by a maximum of 2 persons.
The sauna heater is intended exclusively for heating the sauna cabin to sauna temperature.

Only use the product as described in these instructions for use. Any other use is considered improper and may result in property damage or personal injury. The manufacturer accepts no liability for damage caused or resulting from improper or incorrect use.

2.7. Safety instructions

General hazard warnings



- Improper handling can result in serious personal injury and property damage. Therefore, assembly, installation, commissioning, troubleshooting, maintenance and repair work may only be carried out by qualified persons.
- **Only** assemble the product if the scope of delivery is complete and in perfect condition.
- Ensure that all parts are undamaged and correctly assembled. Improper assembly may result in injury. Damaged parts may affect safety and function.
- Only place the product on a safe, level and firm surface.
- The product can be used by children aged 8 years and above and by persons with reduced physical, sensory or mental capabilities or lack of experience and knowledge if they have been given supervision or instruction concerning the use of the product in a safe manner and understand the hazards involved.
- **Danger to life!** No door lock or other locking device may be fitted to the sauna/door; the sauna cabin must always be freely accessible.
- Keep pets away from the sauna.

Danger to children



- Keep children away from packaging materials. There is a risk of suffocation, among other things!
- Children must not play in or on the product.
- Keep children away from the sauna and the sauna heater.
- Consult a paediatrician before allowing your child to use the sauna.
- **Warning!** Children aged 6 and above may only use the sauna under adult supervision.
- Do not place the product directly in or near a play area.
- Cleaning and user maintenance must not be carried out by children without supervision.

Risk of injury

Improper use of the product may result in injury.



- Do not make any structural changes to the product. Any changes must be approved by the manufacturer and carried out in accordance with the manufacturer's instructions.
- **Danger to life due to electrical voltage:** To avoid burns or electric shocks, ensure that no metal objects or tools come into contact with the heating elements.
- **Danger to life due to electrical voltage:** To avoid the risk of electric shock, all installations and corresponding maintenance work must be carried out by a qualified electrician.
- **Danger to life due to electrical voltage:** If the power cord is damaged, take the product out of service until the power cord has been replaced by the manufacturer, its customer service department or a qualified electrician.

Risk of damage



- Improper handling of the product may result in damage.
- Repair and maintenance work on the electrical system may only be carried out by a qualified electrician.

Risk of explosion



- In the event of a fire, immediately notify the fire brigade and ensure that no persons are present in the sauna.
- **Caution:** Do not store highly flammable, combustible or explosive materials inside the product. Highly flammable materials can catch fire.

3. Product features

3.1. Technical data

Sauna	
Dimensions (W x D x H)	100 x 110 x 190 cm
Bench dimensions	94 x 45 cm
Glass thickness	8 mm ESG
Entrance height	4 cm
Input width	60 cm
Minimum room height	200 cm
Material	Spruce wood
Colour	Natural

Sauna heater	
Dimensions (L x W x H)	35 x 23 x 63 cm
Power	3.6 kW
Voltage	230V AC
Max. temperature	80-100 °C

Product

Experience pure relaxation and well-being in your own home with our traditional ARUNA sauna.
Immerse yourself in soothing warmth thanks to the powerful 3.6 kW sauna heater, which allows temperatures between 80 and 100 °C – perfect for intense sauna sessions and deep relaxation. The robust sandwich-construction rear wall with its hollow chamber insulation ensures excellent heat storage, and the ESG safety glass surfaces create an open, bright feeling of space. The comfortable bench offers plenty of space for relaxing moments. The integrated ventilation elements ensure that the climate always remains pleasant and fresh. A special feature: the ARUNA sauna deliberately does not have a fixed floor so that it fits perfectly into the intended space and can be set up flexibly on different surfaces. Thanks to its easy-care surface and well-thought-out design, the ARUNA sauna can be assembled quickly and easily. In addition to the sauna heater, the scope of delivery also includes a sauna light with cover, sauna stones and practical accessories such as a bucket, ladle, thermo-hygrometer and hourglass – a truly complete set at no extra cost.
Invest in your health – for rest, warmth and relaxation at the highest level!

4. Scope of delivery

Upon delivery, check the packaging for external damage. Furthermore, immediately after unpacking, check the scope of delivery for completeness and the perfect, undamaged condition of the product and all components. Only assemble the product if the scope of delivery is complete and undamaged.
The E27 light bulb is not included in the scope of delivery and can be purchased separately in retail stores.
Make a note of the serial number of the control unit, as this number is required in the event of repairs or ordering spare parts.

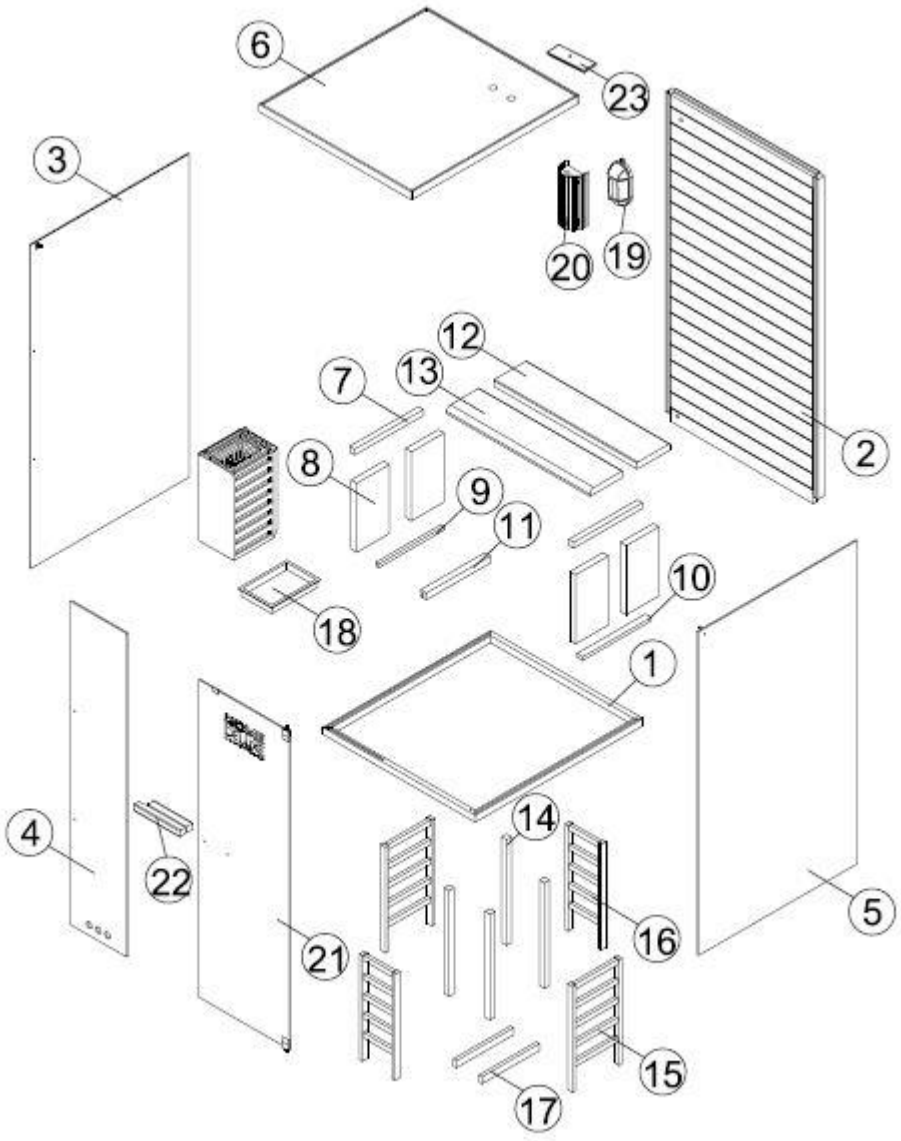

No.	Description	Quantity	Illustration
1.	Base	1	
2.	Rear panel	1	
3.	Left side panel	1	
4.	Front left glass door	1	
5.	Right side panel	1	

No.	Description	Quantity	Illustration
6.	Roof	1	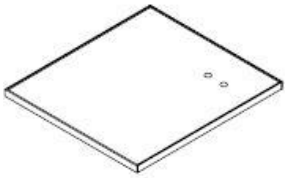
7.	Bench support strip	2	
8.	Bench side panel	4	
9.	Support bar	1	
10.	Support bar	1	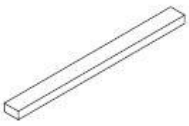
11.	Cable duct	1	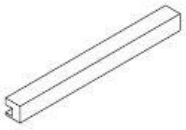
12.	Bench	1	
13.	Bench	1	
14.	Fireplace guard Corner post	4	

No.	Description	Quantity	Illustration
15.	Stove guard side panel	2	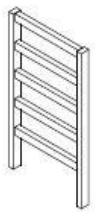
16.	Stove guard	2	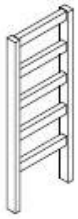
17.	Strips Oven guard	2	
18.	Drip tray	1	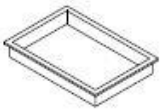
19.	Lamp cover	1	
20.	Lampshade	1	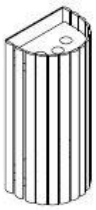
21.	Glass door	1	
22.	Door handle	1	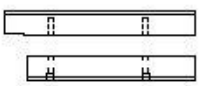
23.	Ventilation cover	1	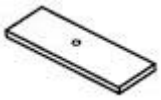

Mounting material (variations possible)

						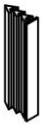
Ø3*16	Ø4*16	Ø4x45	Ø6x60	Ø5x6	Ø6x8	**Rubber seal**
14x	3x	66x	2x	7x	7x	4m

		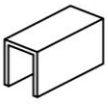		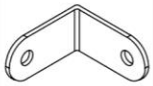	
Ø10.5 x Ø16	**Hinge**	**Glass clip**	2x	4x	23x
3x	2x	1x			

5. Sauna installation

Installation location

The installation of the sauna may be subject to building regulations. If you violate the installation conditions, the authorities may revoke your installation permit.

- Consult the relevant authorities before installation.
- Applicable regulations must be observed.
- Install the product on a level, solid surface.
- Install the product in a dry location.
- The product is only suitable for indoor use.
- Maintain a safety distance of at least 2 metres from other structures. This makes installation easier and can save lives in the event of a fire.
- The room height for installation must be at least 2.17 metres.

5.1. Safety instructions

The following health and safety information must be read carefully.

Risk of injury

Improper handling during installation can result in injury.



- Your product will be delivered in 4 packages. Please ensure that the packages are opened at the top. Be very careful when opening the packages, as they contain fragile parts and glass.
- **Only** assemble the product if the delivery is complete and undamaged.
- Only place the product on a safe, level and firm surface.
- To avoid injury, at least 2 people are required to assemble the product.
- Wear protective clothing such as safety shoes and protective gloves during assembly.
- Keep children away from the assembly site while the product is being assembled. The delivery includes small parts that could be swallowed or cause serious injury.
- **Please note that Home Deluxe GmbH does not cover any costs for assembly or skilled labour, such as electrician costs or similar specialist costs.**
- **Please note that our company does not have its own service or technical team. The customer is responsible for proper assembly and connection work.**

5.2. Assembly of the product

The product is delivered disassembled and requires some effort to assemble. Please follow the assembly instructions carefully. Failure to do so may compromise the function and safety of the product.

Required tools

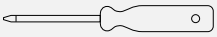	Screwdriver		Measuring tape
	Allen key		Hammer
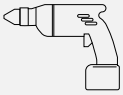	Drill		Step ladder
	Spirit level		Cutter knife
	Pencil		Twist drill bit

Preparation for assembling the sauna:

Only install the product indoors on a level, stable and horizontal surface. For better stability and safety, we recommend placing the product on a foundation or similar.

At least two people are required for these steps.

Step 1: Assembling the base plate and wooden walls

- Place the base plate on a flat, stable and horizontal surface . (**Note the direction**)
- Position the rear wall (**2**) behind the base plate (**1**) and push them together so that they are flush and tightly joined.
- Push the connection cable for the stove through the holes in the side wall. (**see marking**)
- Screw the base plate and rear wall together.

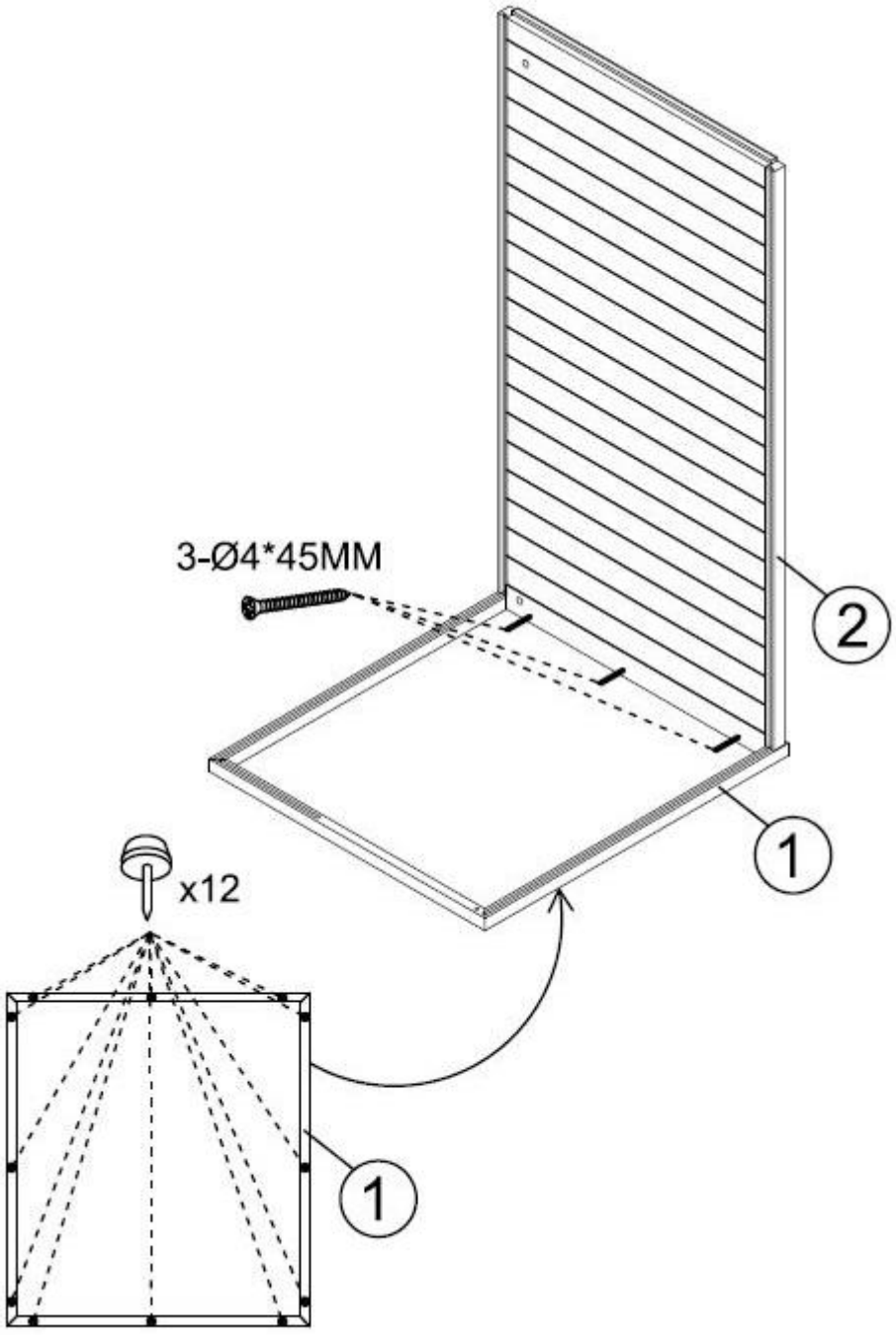

Step 2: Assembling the glass panes

- Place the left side panel (**3**), front left glass door (**4**) and right side panel (**5**) on the outer strips on the base plate.
- Make sure that the three ventilation holes in the glass door are facing down towards the base plate. (**see marking**)
- Slide both glass walls into the groove directly up to the side and rear walls. (**see marking**)

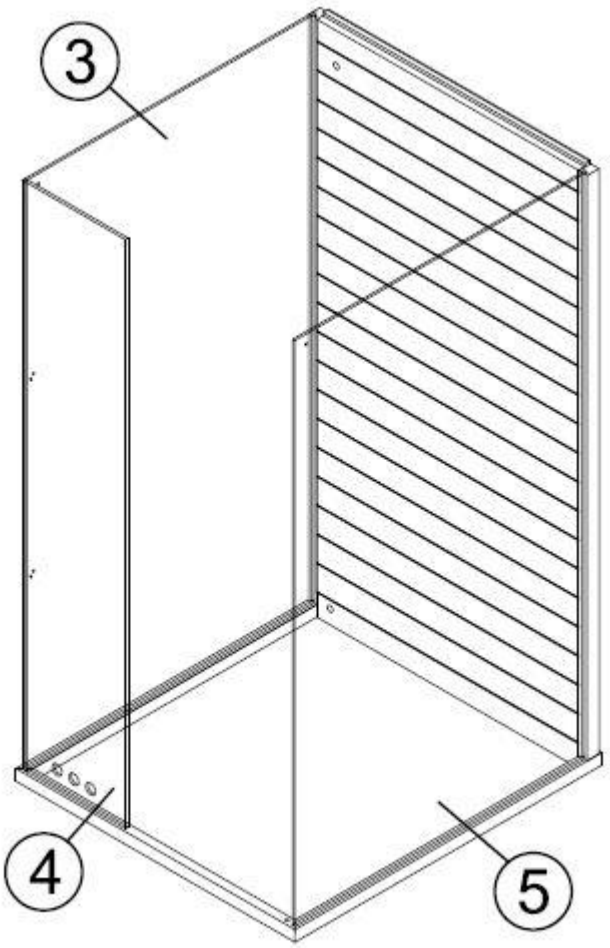

Step 3: Assembling the sauna roof

- Position the sauna roof (**6**) on top of the strips on the side and rear walls.
- At the same time, position the sauna roof over the glass panes; the glass panes must rest against the strips of the sauna roof (**see marking**; the ventilation holes **must** face the large glass pane).
- Screw the brackets to the glass pane and the sauna roof from the inside (the glass pane is pre-drilled).
- Screw the sauna roof to the side and rear walls from above.

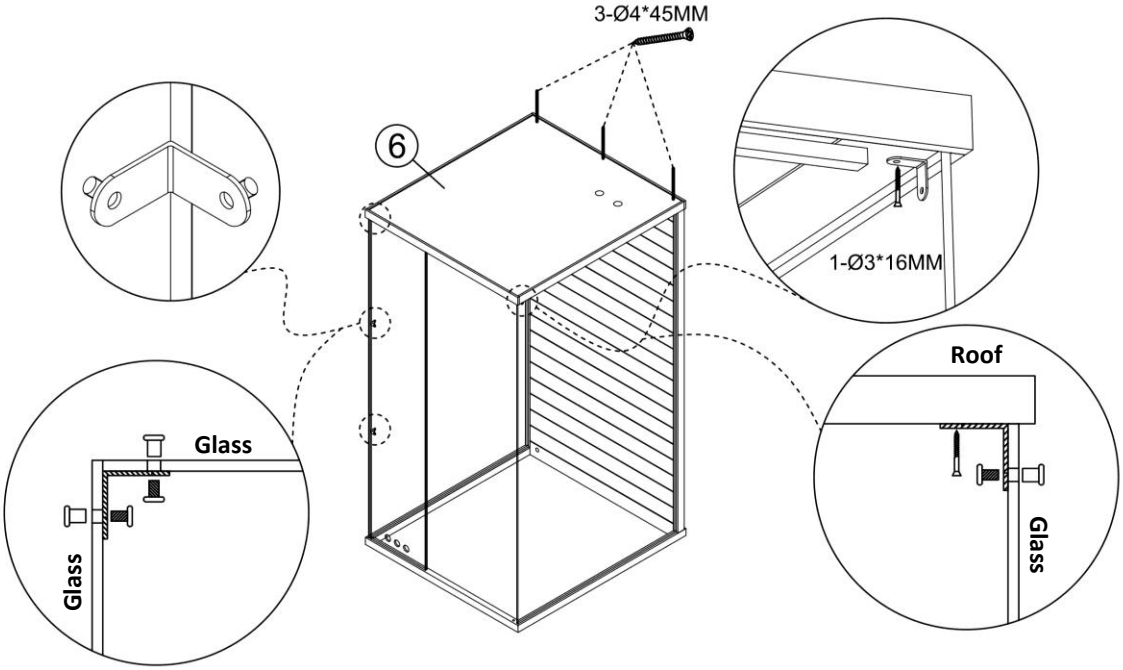

Step 4: Installing the bench seat cover

- Position the bench support strip (**7**), bench side panel (**8**) and support strip (**9, 10**) in front of the large glass pane and push them up against the rear wall.
- Screw the bench seat from behind to the rear wall.

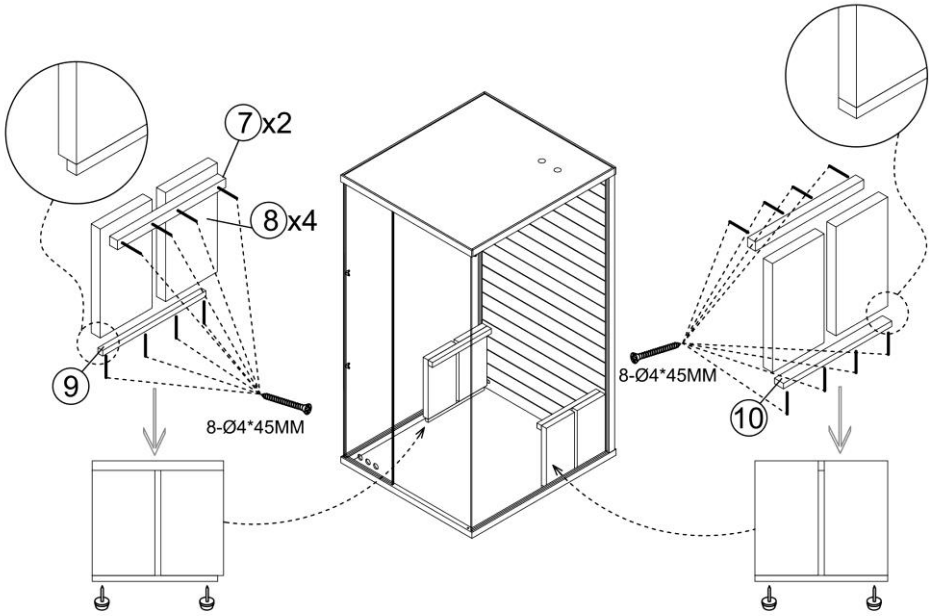

Step 5: Installing the cable duct

- Screw the cable duct (**11**) tightly in place. After connecting the sauna heater, feed the power cable through the hole in the sauna roof to the outside.

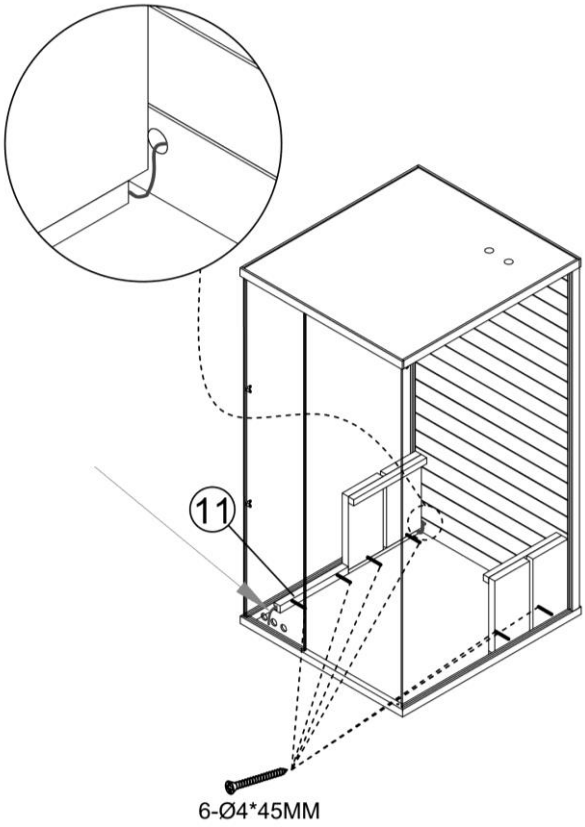

Step 6: Installing the benches

- Place the bench (**12, 13**) on the support and screw it tight.

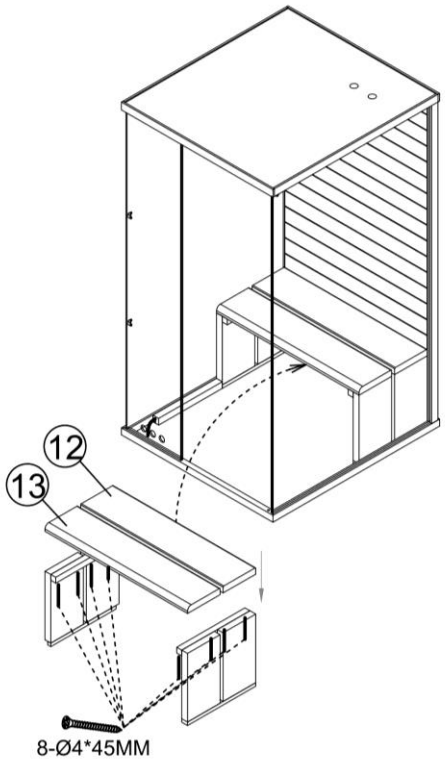

Step 7: Installing the heater guard

- Assemble and screw the heater guard (**14, 15, 16, 17**) into place.
- Place the heater guard in the sauna cabin.

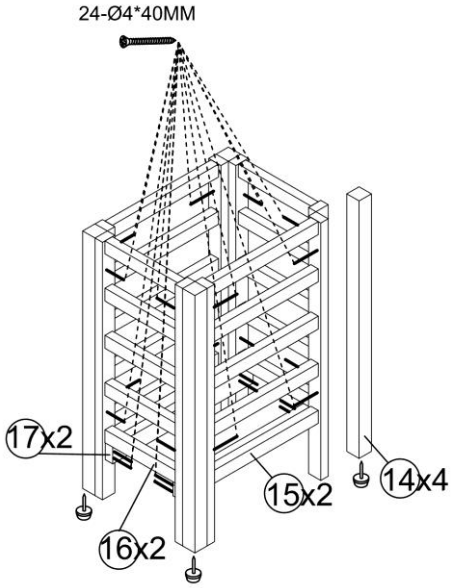

Step 8: Installing and connecting the sauna lamp

- Screw the light bulb (max. 40 W, E27, not included) into the lamp sockets. Caution: Have the sauna lamp installed by a qualified electrician.
- Then screw the lamp cover (**19**) to the back of the wall, where there is a cable gland for the power cable.
- Then screw the lampshade (**20**) above the lamp cover to the sauna wall.
- Once installed, this can be connected to a power supply (socket or switch). Slide the drip tray (**18**) under the sauna heater.

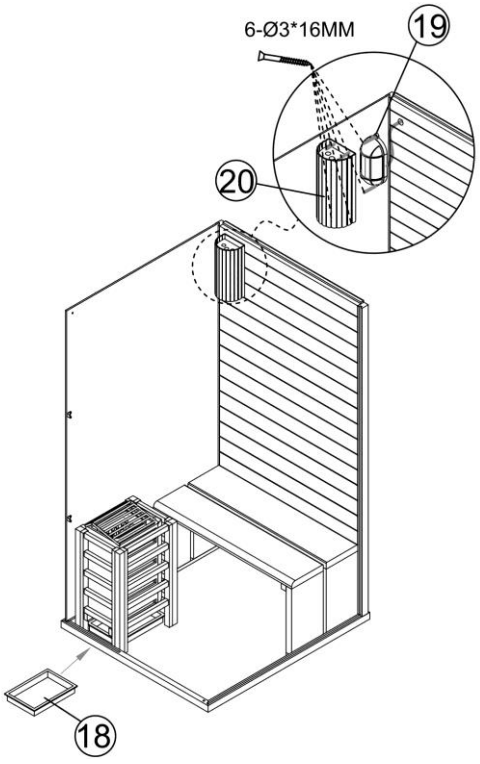

Step 9: Installing the glass door and door handle

- Slide the glass clip onto the top/front of the glass door (**21**).
- Slide the door hinge onto the bottom of the glass door and secure it (do not tighten it yet).
- Slide the upper door hinge into the holder in the sauna roof.
- Insert the rubber seal. Be careful not to stretch the seal too much.
- Place the glass door into the hinge holder at the bottom, slide the glass door into the upper hinge and secure it.
- Align the glass door and tighten the door hinges.
- Then fit the door handle (**22**) to the glass door and screw it in place from the inside. (Handle / glass door / handle). Next, fit the wooden cover caps into the holes in the door handle.
- Then screw the ventilation cover (**23**) securely to the top of the roof.

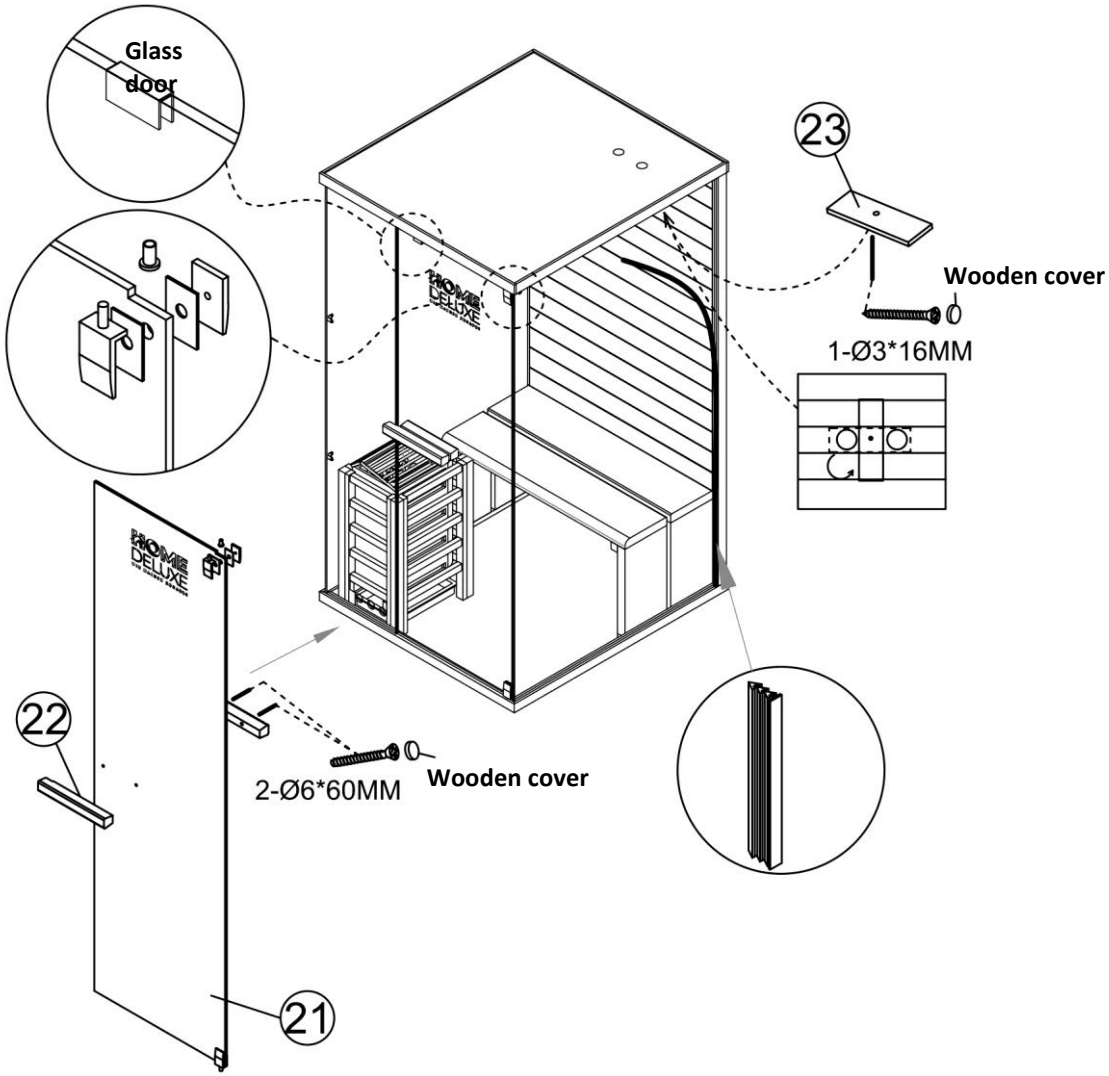

Note

The heater must **not** be placed directly on the sauna floor. The sauna heater must be positioned at a distance from the sauna floor to ensure good air circulation. The drip tray under the heater is used to collect excess water from the infusion.

5.3. Sauna heater: Model JM

General

The instructions refer to the sauna heater. They contain important information on installation, operation and use. Read the instructions carefully, especially the safety instructions and operating instructions, before installing and commissioning the sauna heater, and keep them in a safe place. Only use the sauna heater as described in these instructions to avoid accidental injury or damage. If the sauna heater is passed on to a third party, these instructions must also be handed over.



5.4. Safety instructions

Risk of injury

Improper use of the sauna heater can result in injury.



- **Only** install the sauna heater if the scope of delivery is complete and undamaged.
- **Risk of electric shock**: Installation and maintenance work on the sauna heater and sauna lamp **must** be carried out by a qualified electrician in accordance with the current, valid electrical safety regulations.
- **Danger to life due to electrical voltage**: There is an immediate danger to life if live parts are touched. Damage to the insulation or individual components can be life-threatening. -> If the insulation is damaged, switch off the power supply immediately and arrange for repairs.
- Ensure that the sauna heater is switched off after use and that the timer is set to "O".
- **Do not** over-tighten the timer control knob, as this may prevent the sauna heater from switching off and cause it to continue running without a time limit.
- Do not throw away any sauna stones.
- Stack the sauna stones on top of each other so that they do not fall between the heating elements. Do not press the sauna stones between the heating elements.
- Do not drop the sauna stones into the sauna heater; place them carefully.
- When stacking the sauna stones, avoid applying direct pressure to the heating elements.
- When filling the sauna heater, place the large sauna stones at the bottom. Make sure that they are not placed too close together so that air can still circulate.
- Remove any broken or damaged sauna stones from the sauna heater.
- Do not place too many sauna stones on the sauna heater.
- Do not place any objects on the sauna stones; the ventilation of the product must be ensured.
- The sauna heater and sauna stones can burn your skin.

- The warranty for electric sauna heaters does not cover the improper use of sauna stones, the use of sauna stones that are too small and block the ventilation of the sauna, or other obstructions to the ventilation of the sauna caused by the accumulation of other objects.
- Excessive moisture can cause electrical appliances to malfunction.
- Do not pour too much water onto the sauna stones, as this can lead to excessively hot steam.

5.5. Installation and electrical connection of the sauna heater

Caution: Read the operating instructions thoroughly and carefully before use.

- **Only** install your sauna heater if the scope of delivery is complete and undamaged.
- Ensure that all components are undamaged.

Note

To avoid a short circuit or tripping of the RCD plug, we strongly recommend that you connect the product to a separately fused circuit. Overloading can occur if several electrical appliances are operated simultaneously on the same circuit or if an extension cord is used. Please note this recommendation when installing your hot tub, sauna or infrared cabin. Further information can be found in the installation instructions and technical data.

Installation and electrical connection of the sauna heater

Note:
Only a qualified electrician may connect the sauna heater to the mains, taking into account the current, valid electrical safety regulations.

- Install the sauna heater on the wall or on the heater plate using the screw provided in the heater, in accordance with the minimum safety distances and volumes.
- The electrical connection of the sauna heater may **only** be carried out by a qualified electrician, taking into account the current, valid electrical safety regulations.
- The drip tray must be placed under the sauna heater.
- Lift and place the sauna heater in the heater protection grille, making sure that it does not stand directly on the sauna floor so that air can circulate freely.
- The wall next to the sauna heater must not be covered with materials such as asbestos or Eternit panels, etc., as this type of cover can cause high temperatures and a risk of burns.
- Use suitable materials for the ceilings and walls.
- Each sauna must be connected to its own electrical circuit. Do not connect **any** other electrical devices to the same circuit.
- The power supply cable must be made of REWE rubber-insulated cable or an equivalent material. Do not use PVC cable, as this is not permitted because it can become porous when exposed to heat.
- Connect the power cable to the sauna heater as shown in the connection diagram. (**See connection diagram**). Then feed the power cable through the hole in the sauna to the outside and connect it to a separate circuit. (This work **must** be carried out by a qualified electrician.

Connection diagram

Model	Kabel für
3.6KW	220 V 1 ph 240 V 1 ph mm²
	3*2.5

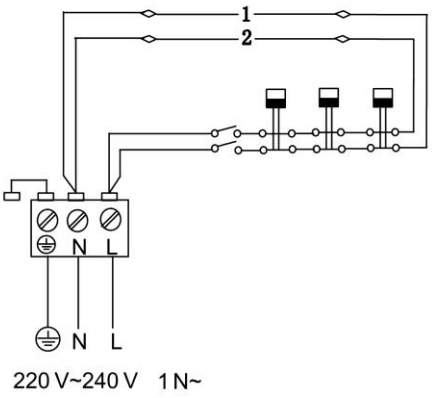

L:	Connection of the phase
N:	Neutral conductor
⏚	Earth connection

- If the connection or cables are higher than 1000 mm above the sauna floor or walls, they must be able to withstand a temperature of at least 170 °C. Electrical appliances installed higher than 1000 mm from the sauna floor must be approved for use at an ambient temperature of 125 °C (marking T125).

Connecting lamps

The sauna lamps can be connected in the junction box. They can use the same cross-section of connection cable as the sauna heater.

Caution: The upper screws must be tightened securely, and the minimum distance between the screw head and the wall must be 3 mm.

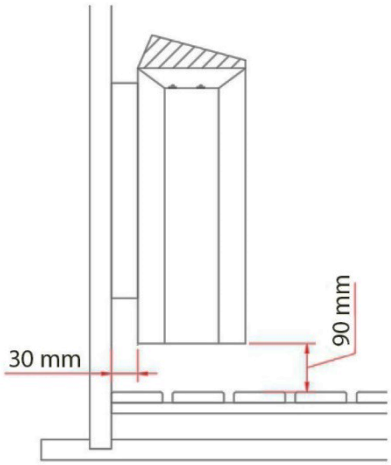

Model	Power	Cable for
FK-36	KW	220 V 1 ph 240 V 1 ph mm^2
	3.6	3 x 2.5

Note:
The cables must be fused with **20 amps**.

6. Application

6.1. Safety instructions

The following health and safety information must be read carefully.

Risk of injury

Improper handling during operation can result in injury.



- No modifications may be made to the product.
- Before switching on the sauna heater, ensure that no objects are stacked on the product and that they are at a safe distance.
- Check and ensure that the timer is set to "0" after leaving the sauna.
- **Do not** over-tighten the timer control knob, as this may prevent the sauna heater from switching off and cause it to continue running without a time limit.
- A long stay in a hot sauna causes the body temperature to rise, which can be dangerous.
- Children aged 6 and above may only use the sauna under adult supervision.
- Keep children away from the sauna and the sauna heater. Do not throw sauna stones.
- Do not place sauna stones between the heating elements.
- When stacking the sauna stones, avoid applying direct pressure to the heating elements.
- Place the large sauna stones at the bottom when filling. Make sure that they are not placed too close together so that air can still circulate.
- Remove broken or damaged stones from the sauna heater.
- Do not place too many sauna stones on the sauna heater.
- Do not place any objects on the sauna stones; the ventilation of the product must be ensured.
- The product **must** be under constant supervision during start-up.
- **Risk of burns, electric shock:** Do not touch the sauna lamp while the sauna is in operation.
- **Risk of burns:** keep away from heated and hot surfaces. The sauna heater, sauna stones and metal objects must not be touched during heating and use of the sauna.
- **Risk of burns:** Allow the sauna cabin and light bulb to cool down before replacing the light bulb.
- **Risk of burns:** Please note that the sauna ladle becomes hot during use. Allow the ladle to cool down before using it again.
- **Risk of scalding:** Keep a minimum distance of 30 cm from the hot sauna heater.
- R**isk of scalding:** Do not pour water onto the sauna stones if someone is in the immediate vicinity of the sauna heater. The hot water can splash onto the sauna user and injure them.
- **Risk of slipping:** Watch out for slippery floors when entering the sauna.
- Do not pour too much water onto the sauna stones, as this can lead to excessive hot water vapour.
- Using the sauna may cause medical problems for some users. The following groups of people should consult a doctor beforehand:
  Pregnant women, people with heart disease, high blood pressure, circulatory problems, after taking medication, with diabetes, or if feeling unwell.
- Consult a doctor before using the sauna if you have any symptoms of illness, e.g. signs of a cold or flu.



- Do not use the sauna if you are under the influence of narcotics (alcohol, medication, drugs, etc.).
- A sauna session should not last longer than half an hour. A sauna session that is too long can

lead to rapid heartbeat, slight heart pain, weakness or dizziness. If any of the above symptoms occur, the sauna session should be ended immediately.

- Prolonged exposure to a hot sauna can cause your blood temperature to rise, which can have a negative effect on your body.
- Do not sleep in the hot sauna.
- Do not store bottles of infusion agents in the sauna.
- Drink plenty of fluids (e.g. water) before and after using the sauna.
- Keep your skin cool if necessary.

Risk of damage



- Before each use and at regular intervals, check all fastenings and the product for visible damage. Pay particular attention to load-bearing components. If there are any changes to the material or damage, take the product out of service. Contact the manufacturer's customer service department for further instructions and replacement parts if necessary.
- Sea air and humid climates can cause the metal surfaces of the sauna heater to corrode.
- Do not force the sauna stones between the heating rods.
- The sauna stones do not have to fit completely between the heating rods and be placed there.
- Use the sauna completely dry, as water can damage the wood.
- **Recommendation:** Use and sit on 2–3 towels during your sauna session to protect the wood.
- **Fire hazard:** Do not use the product for drying laundry.

6.2. Initial use

When using the sauna for the first time, the sauna heater and sauna stones will give off odours. Ventilate the sauna cabin after heating to allow air to circulate. Do not remain in the sauna cabin during the first heating.

6.3. Operation

Caution!

Please consult the fire safety authorities regarding the use of fire walls and insulation. The ventilation openings must not be insulated.

- The sauna can accommodate a maximum of 2 people.
- Always place the drip tray under the sauna heater so that excess water, e.g. from the infusion, can be collected. If the drip tray is filled with water, it must be emptied.
- The sauna heater is equipped with a timer and a temperature control, where the time and temperature can be set and regulated. The sauna heater can be switched off by setting the timer to "0".
- Adequate air circulation is essential for the sauna session. The air in the cabin should be renewed 6 times per hour. Properly installed ventilation creates pleasant sauna conditions and also saves energy.
- To maintain the temperature during the sauna session, the ventilation must be closed.
- The ventilation openings must not be blocked during operation.
- After using the sauna, open the ventilation and also the sauna door to allow the sauna to dry out.
- Only use drinking water for the infusion. Other types of water or liquids can damage the heating elements and void the warranty.
- Do not use too much water for the infusion, as this can result in excessive hot water vapour.
- We recommend not using the sauna for longer than 30 minutes per session. Sweating begins approximately 8–15 minutes after entering the sauna.

- Do not eat anything for about an hour before using the sauna, as this can cause discomfort.
- Only use the sauna when your body is relaxed and calm, not after strenuous exercise or hard work.
- The function of the sauna heater is to bring the temperature of the sauna cabin to a suitable and comfortable temperature. The temperature is brought to an appropriate level in about an hour, which is around +65 °C.

6.4. Controls

Temperature control

Note
Before switching on the sauna heater, check that there are no objects on or in the immediate vicinity of the sauna heater.

Depending on the size of the sauna cabin, the sauna heater can reach the preset temperature in 30 to 60 minutes. This can be regulated to a temperature that is comfortable for you using the thermostat. A thermostat with a three-phase connection can ensure that a comfortable temperature is maintained in the sauna cabin. The temperature is set using the rotary control.

max.

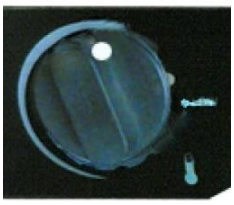

min.

Timer

The timer is the "off switch" for the sauna heater; it must be set exactly to "0" for the heater to be switched off. The heating time is set using the rotary control.



Time span

0 = Off
1 = 30 min
2 = 60 min
3 = 90 min
4 = 120 min
5 = 150 min
6 = 180 min

6.5. Sauna stones and sauna infusion

Information about sauna stones

- **Recommendation:** Before using for the first time, clean the sauna stones to remove any dust and then place them in a pile in the sauna heater.
- Place the large sauna stones at the bottom of the sauna heater. Make sure that they are not stacked too tightly so that air can still circulate.
- The sauna stones must be of the highest quality. Use a solid sauna stone that is specifically designed for use in electric sauna heaters.
- Place a sufficient number of sauna stones (10–15 kg) in the sauna heater, but only after the installation of the sauna heater and control box has been completed.
- The diameter of the sauna stones is usually 5 to 25 cm.
- The sauna stones should be intended for use in sauna heaters and made of solid volcanic rock. The surface should be pointed and rough, such as peridot or olivine.
- Do not use loose or porous ceramic stones, as these can cause damage to the sauna and sauna heater at high temperatures.
- Do not place sauna stones directly on the heating elements.
- Do not stack the sauna stones too high.
- There should be no objects or devices in the stone chamber or near the sauna heater that could alter the amount or direction of the air flow through the sauna heater.

Placing the sauna stones

- Do not drop the sauna stones into the sauna heater.
- Avoid wedging the sauna stones between the heating elements.
- Stack the sauna stones in a loose, permeable arrangement so that air can flow and circulate between the stones.
- When stacking, make sure that the sauna stones do not press against the heating rods.
- Do not stack the sauna stones too high on top of the sauna heater.
  There must be no objects or devices in the stone chamber or near the sauna heater that could alter the amount or direction of the air flow through the sauna heater.

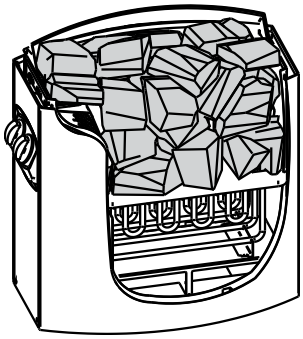

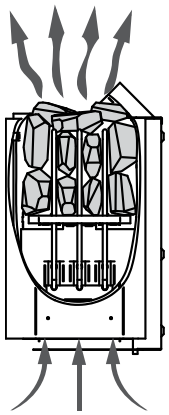

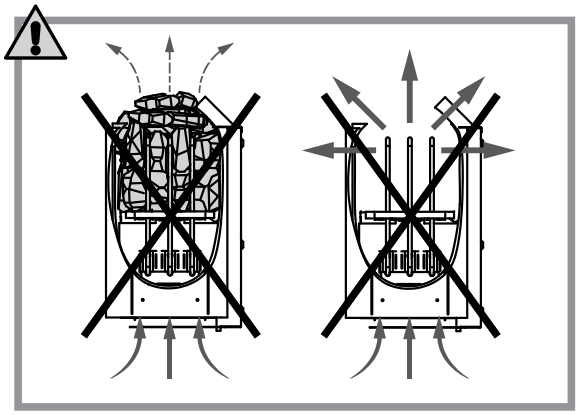

Sauna infusion

- When the sauna cabin is heated up, the air becomes dry. Pouring an appropriate amount of water onto the hot sauna stones brings the humidity to the right level and the skin feels the effects of the increased moisture.
- The right level of humidity allows the skin to perspire naturally and breathe gently.
- Excessive temperature and humidity can lead to an unpleasant feeling.
- A longer stay in the sauna cabin can lead to an increase in body temperature. Sauna users should feel comfortable.
- When pouring water onto the sauna stones, the capacity of the wooden ladle should **not** exceed 200 ml.
- Only tap water/drinking water should be used for the infusion.
- Only fragrances designated for this purpose may be used for the infusion. Follow the instructions on the packaging.

Water properties	Effect	Recommendation
Humus content	Colour, taste, deposits	<12 mg/l
Iron content	Colour, odour, taste, deposits	<0.2 mg/l
Water hardness: The most important substances are: manganese (Mn) and lime, i.e. calcium (Ca).	Deposits	Man: <0.05 mg/l Ca: <100 mg/l
Chlorinated water	Harmful	Must not be used
Salt water	Rapid corrosion	Must not be used

6.6. Sauna recommendations

Instructions for using the sauna

- Clean your body before using the sauna.
- Only stay in the sauna as long as it feels comfortable.
- Forget all your stress and relax.
- Coordinate with other users regarding the infusions.
- Allow your heated skin to cool down in between sessions. If possible, take a dip in a cool pool or have a cold shower.
- Wash yourself after using the sauna.
- Rest until you feel balanced.
- It is best to drink clear water or a soft drink to stabilise your fluid balance.

Hygiene in the sauna cabin

- Use towels to protect the benches from sweat.
- Clean the benches, sauna walls and floor at least every six months. Use a sauna cleaning agent and a brush for this.
- Wipe dust and dirt from the sauna heater with a damp cloth.
- Remove limescale deposits from the heater with 10% citric acid.

7. Troubleshooting

If faults occur during operation of the product, please check the following causes of faults using the table below. If the fault cannot be rectified, please contact customer service:

Fault	Possible cause	Solution
The sauna wobbles or swings	• The sauna is standing on an uneven, loose surface	• Place the sauna on a level, firm surface
Heat is escaping from the sauna	• The door is slightly open	• Close the door
The sauna heater cannot be switched on	• No mains voltage	• Plug in the mains cable • Check the fuse or RCD switch of the power supply • Main switch of the power supply is off
The sauna heater does not switch off	• The timer is not set exactly to "0" • The timer has been turned beyond the 0 position	• Set the timer precisely to "0" • Set the timer precisely to "0"
The sauna heater is not working properly	• Overheating protection has been triggered • Thermostat not set correctly • Timer is set to "0"	• Contact customer service • Set the temperature correctly • Set the timer
The sauna heater is not heating up properly	• Heating elements are faulty • Temperature does not rise • Sauna stones are too close together • Ventilation is blocked	• Check the heating elements • Increase the temperature • Rearrange the sauna stones so that air can circulate • Open the ventilation
The sauna heater heats up quickly, but the sauna stones do not get properly warm. Water is running behind the sauna stones.	• Ventilation closed • Thermostat regulates the temperature down • The heating output is too high	• Open the ventilation • Contact customer service • Contact customer service
Noises from the sauna	• Sauna stones and sauna components can make noises when heating up or cooling down. • Timer ticks loudly	• No fault • No fault

8. Maintenance and care

Attention! All maintenance work must be carried out by qualified technical personnel.

- High humidity in the sauna cabin does not damage the wood.
- The sauna cabin must be well ventilated after use and allowed to dry thoroughly.
- Spray the wood (walls and benches) in the sauna cabin with water.
- Wipe wooden surfaces with a damp cloth.
- Depending on usage, sand the seats at least once a year with fine sandpaper.
- If the benches are very dirty, they can be cleaned with a 3% hydrogen peroxide solution.
- If the exterior walls of the sauna are scratched or worn, they can be treated with furniture polish, oil or other furniture care products.
- Scratches or scuffs in the cabin can be sanded down.
- Some of the sauna stones will break naturally during use. Refill the sauna heater with new sauna stones.
- Remove the sauna stones at least once a year and reposition them. Also remove dust and small stones from the lower part of the sauna heater. This will make the sauna more efficient and prevent the heater from overheating.



Disinfectants are highly corrosive!
Follow the instructions provided by the cleaning agent or disinfectant manufacturer.
Wear protective gloves when cleaning.



Caution! The interior of the sauna cabin must **not** be painted, varnished or impregnated. Wooden parts (e.g. benches, protective grilles, etc.) used inside the sauna cabin must also not be painted, varnished or impregnated. These surfaces release toxic gases when heated.

9. Disassembly

9.1. Safety instructions

Risk of injury
Improper handling during disassembly can result in injury.



- Disconnect the product from the power supply before dismantling. Contact with live components may result in electric shock, which can cause burns or death.
- The product is heavy and large; at least two people are required for disassembly.
- Secure the product against falling before disassembly.

Disassembly of the product must be carried out in reverse order to assembly. (**see chapter on assembly**)

10. Disposal instructions



- Dispose of the product and all components in accordance with local and national regulations to avoid damage to the environment.
- Our packaging is made from environmentally friendly materials. These can be recycled and thus serve as valuable raw materials. Dispose of the packaging material (cardboard boxes, dirty packaging, etc.) separately and properly in accordance with the applicable national regulations.
- Contact the manufacturer if you are unsure about disposal.
- You can also obtain information on proper disposal from your local waste disposal centres.

11. Electrical and electronic equipment – information for private households

The Electrical and Electronic Equipment Act (ElektroG) contains a number of requirements for the handling of electrical and electronic equipment. The most important ones are summarised here.

1. Separate collection of old appliances

Electrical and electronic equipment that has become waste is referred to as waste equipment. Owners of waste equipment must dispose of it separately from unsorted municipal waste. You must separate old batteries and accumulators that are not enclosed in the waste equipment, as well as lamps that can be removed from the waste equipment without causing damage, from the waste equipment before handing them in at a collection point. Separate waste equipment in order to prepare it for reuse.

2. Options for returning old appliances

Owners of waste equipment from private households can return it to the collection points of the public waste disposal authorities or to the return points set up by manufacturers or distributors in accordance with the Elektro G. An online directory of collection and return points can be found on the website: https://www.stiftung-ear.de or https://www.take-e-back.de.

3. Data protection notice

Old appliances often contain sensitive personal data. This applies in particular to information and telecommunications technology devices such as computers and smartphones. In your own interest, please note that each end user is responsible for deleting the data on the old appliances to be disposed of.

4. Take-back obligation of distributors

Distributors with a sales area for electrical and electronic equipment of at least 400 m^2 and distributors of food with a total sales area of at least 800 m^2 who offer and make available electrical and electronic equipment on the market several times a calendar year or on a permanent basis are obliged

- when a new electrical or electronic device is supplied to an end user, take back, free of charge, an old device of the same type belonging to the end user, which performs essentially the same functions as the new device, at the point of supply or in the immediate vicinity thereof, and
- at the end user's request, take back old appliances that are no larger than 25 cm in any external dimension free of charge at the retail outlet or in the immediate vicinity; the take-back may not be linked to the purchase of an electrical or electronic appliance and is limited to three old appliances per type of appliance.

5. Meaning of the "crossed-out wheelie bin" symbol



The symbol of a crossed-out wheelie bin, which is regularly displayed on electrical and electronic equipment, indicates that the respective device must be collected separately from unsorted municipal waste at the end of its service life.

- Manufacturer registration number
- As a manufacturer within the meaning of the ElektroG, we are registered with the responsible foundation Elektro-Altgeräte Register (Nordostpark 72, 90411 Nuremberg) under the following registration number: WEEE Reg. No. DE86467979

Home Deluxe GmbH
Schanzeweg 2
32312 Lübbecke
Germany
Tel. +49 (0)5743 6181-0
www.home-deluxe-gmbh.de

GA-506-00-ARUNA_S
2025/11